P100001388
REF_3K3W_3LFC_PSU
ASSEMBLY INSTRUCTIONS

INDEX

- P2 - assembly of electronic modules
- P3 - assembly of mechanical components

					Datum	Name
				Gezeich	19.11.2025	Wernegger
				Kontroll		
				Norm		
Status	Änderungen	Datum	Name			

P100001388 REF_3K3W_3LFC_PSU

A2

1

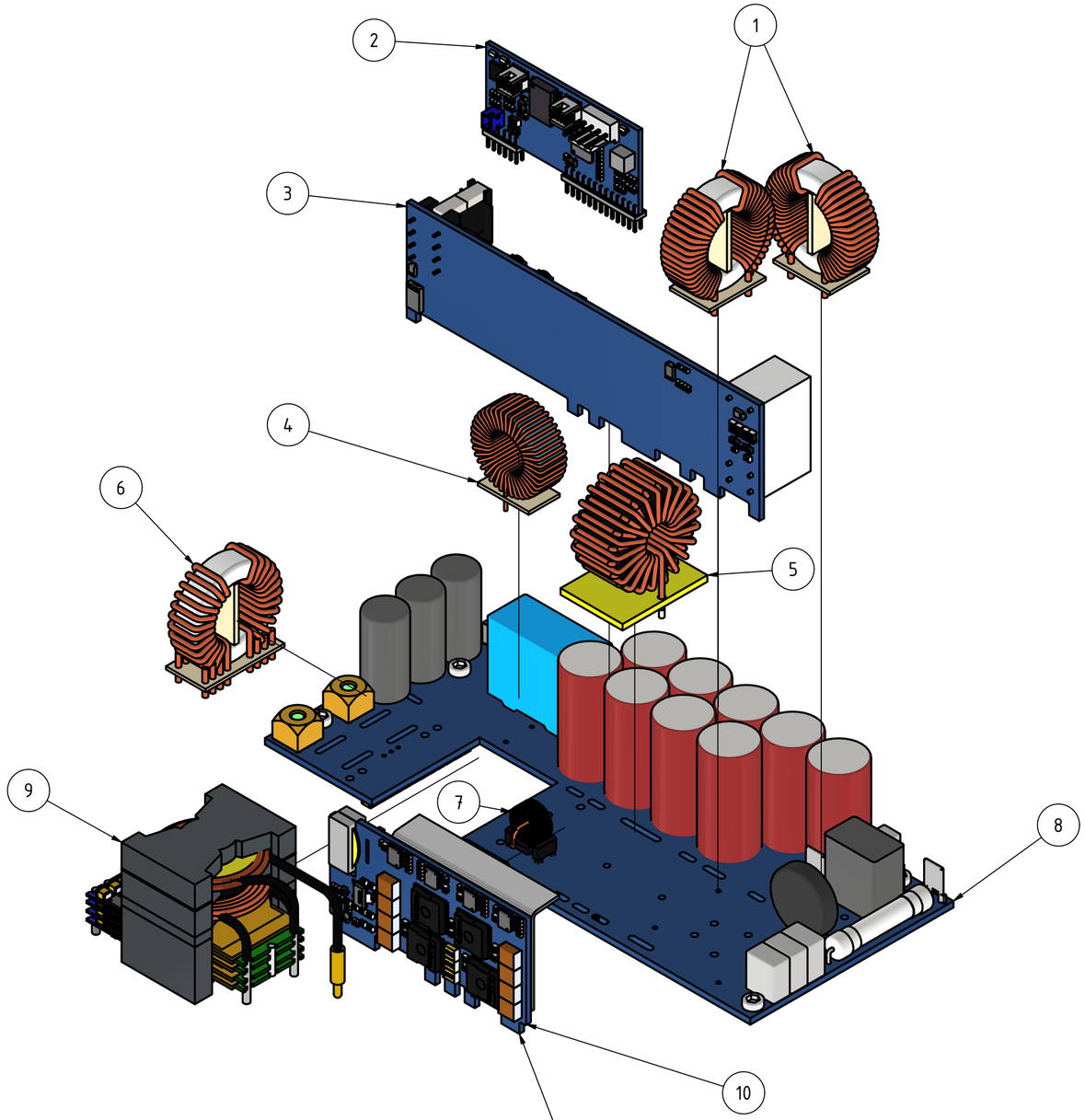

PARTS LIST			
ITEM	QTY	PART #	DESIGNATOR
1	2	MG100003070/ ICE8024.3002.052	L1+L2
2	1	CD100001388	X3+X6
3	1	PW200001388	X2
4	1	MG4000003070	L3
5	1	MG300001389	L4
6	1	MG200003070/ ICE8024.3002.053	L6
7	1	MG600003070/ ICE8052.1102.052	TR1
8	1	M100001389	
9	1	TF100003074	T1
10	1	PW100001389	X7

Assemble before soldering to main board!
See sub-assembly instructions for PW100001389

					Datum	Name
				Gezeich	19.11.2025	Wernegger
				Kontroll		
				Norm		
Status	Änderungen	Datum	Name			

P100001388 REF_3K3W_3LFC_PS

A2

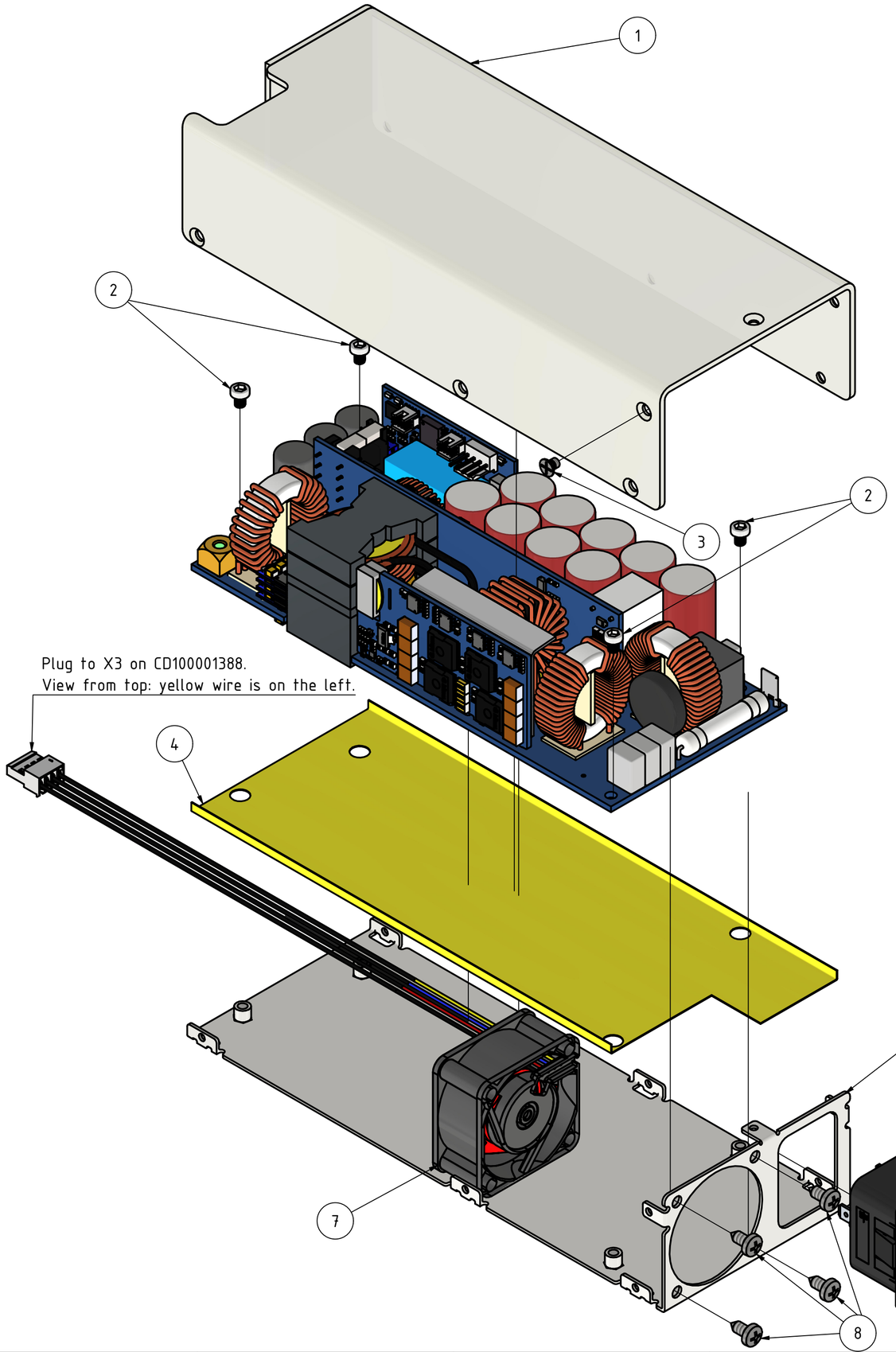

PARTS LIST			
ITEM	QTY	PART #	COMMENT
1	1	HO100003073	
2	4	M3 x 5 Hex head	
3	7	M3x4 countersunk head	pictured only once
4	1	IS100003070	
5	1	MP100003072	
6	1	IEC AC Connector 100003071	
7	1	FA100003070	
8	1	Self-tapping screws UTS 8-1/2	RS Components 546-5705
9	1		

	Datum	Name
Gezeich	19.11.2025	Wernegger
Kontroll		
Norm		

Status | Änderungen | Datum | Name

P100001388 REF_3K3W_3LPFC_PS

A2